Навигационная система Carformer NAV 9320 на базе операционной системы Android

Инструкция

WP9320 is Wonde Proud's new era for Android 4.3 GPS+GLONASS dual-mode navigation. Following past model's stability and universal compatibility, we developed WP9320 as an advanced new model. GPS+GLONASS dual-mode for more accurate positioning, HDMI output for entertainment, dual video display providing sound drive/passenger service, and wifi/3G/4G access are all now in front of your eyes.

Supported with Wonde Proud plug & play GPS/multimedia interface, WP9320 is going to have your driving experience enjoyable.

I. Installation 3
A. Connection: 3
B. Pin definition: 5
1. on WP9320 main box: 5
a. 24-pin connector: 5
b. 4-pin touch port (resistive touch): 5
c. Cap touch port (capacitive touch): 5
2. On 24-pin connector 6
a. 9-pin RGB: 6
b. 8-pin Data: 6
c. 6-pin Uart: 6
II. Settings 7
A. General settings 7
1. select correct resolution and touch panel 7
2. select HDMI resolution 9
3. Wifi connection 9
4. Password of screen lock 11
5. Start-up picture change 13
6. Boot-up animation change 14
B. Engineering settings 15
1. AutoRun & SD Card check 15
2. Screen shot 16
3. Car mode settings 16
4. Hide apps 17
5. Navigation bar 18
6. Remove account 20
7. Launcher default 20
III. RF remote control 22
IV. Software update 23

1. OS version check 23

2. OS update 23

I. Installation

A. Connection:

As long as your monitor or car in-dash have RGB/CVBS input for external navigation, you will be able to integrate WP9320 Android 4.3 navigation box. The following charts are guides for WP9320's installation.

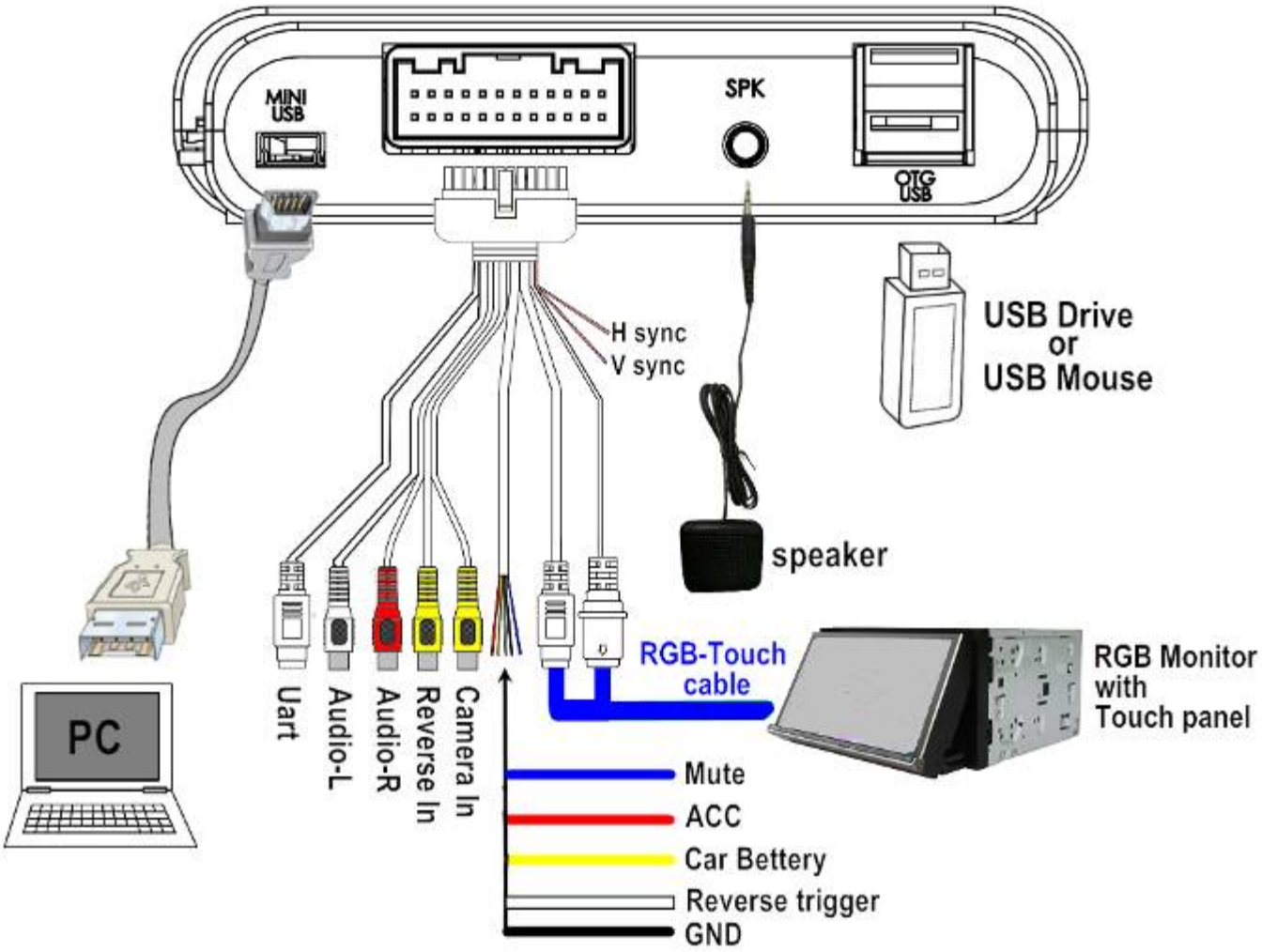

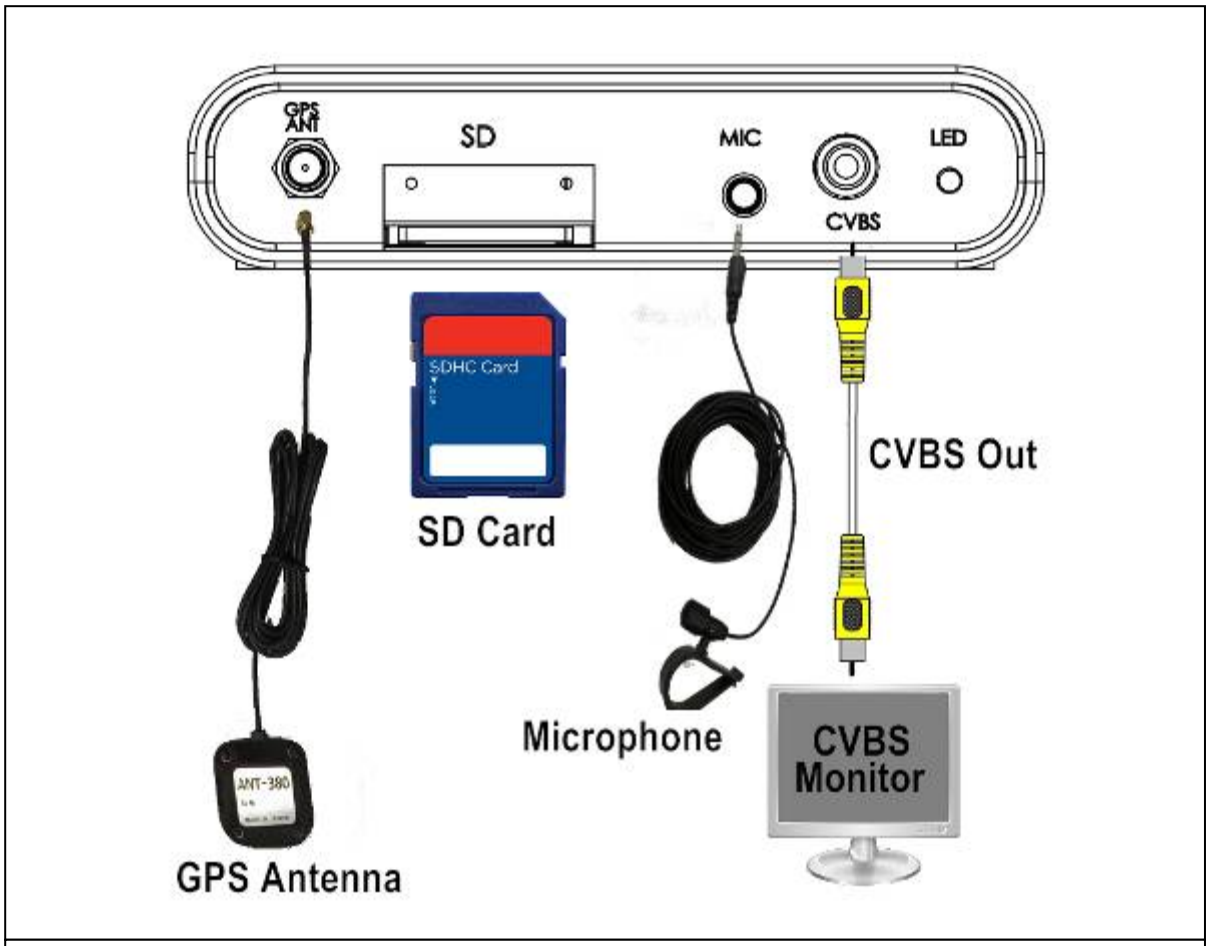
GPS ANT
SD
MIC
LED
CVBS
SDHC Card
SD Card
CVBS Out
Microphone
CVBS Monitor
ANT-380
GPS Antenna

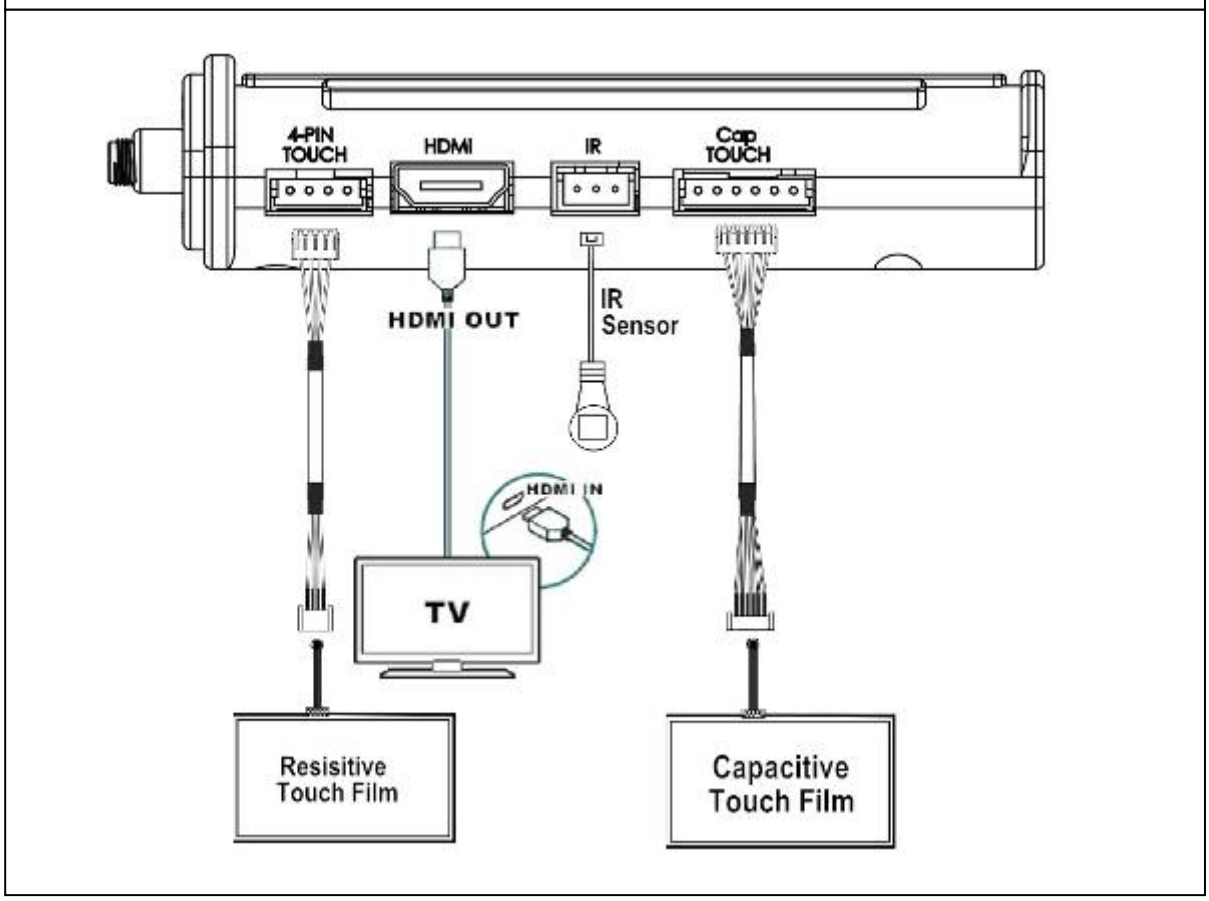
4-PIN TOUCH
HDMI
IR
Cap TOUCH
HDMI OUT
IR Sensor
HDMI IN
TV
Resisitive Touch Film
Capacitive Touch Film

B. Pin definition:

1. on WP9320 main box:

a. 24-pin connector:

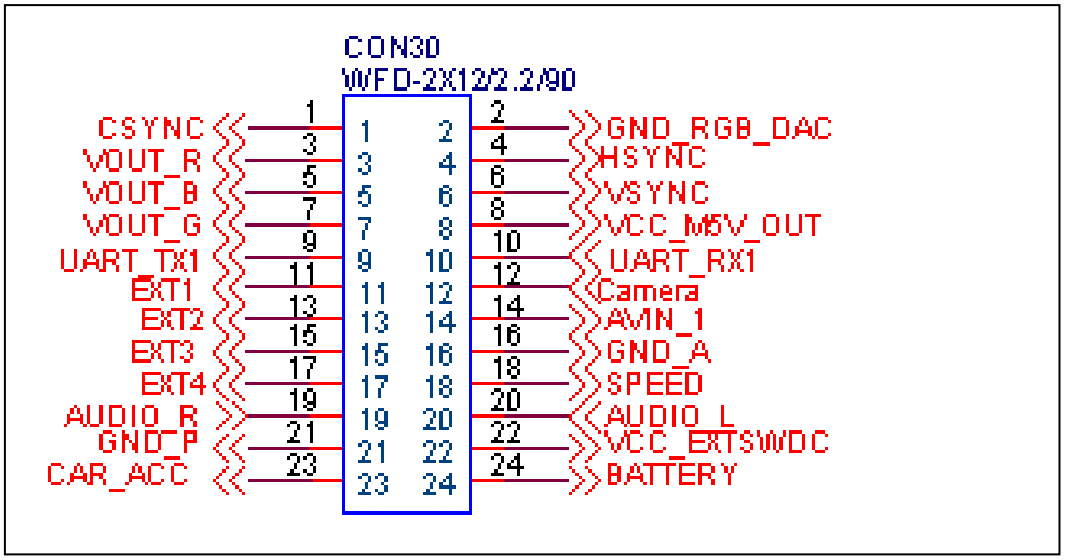

b. 4-pin touch port (resistive touch):

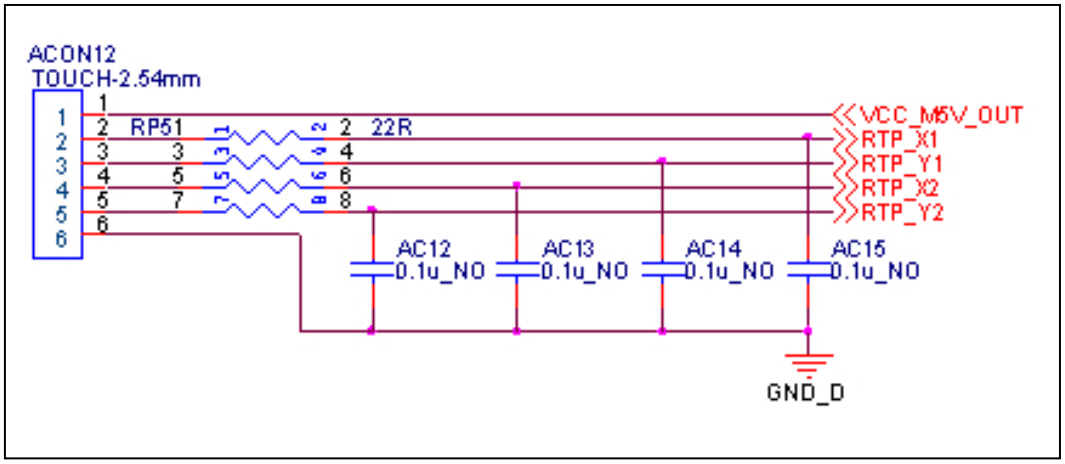

c. Cap touch port (capacitive touch):

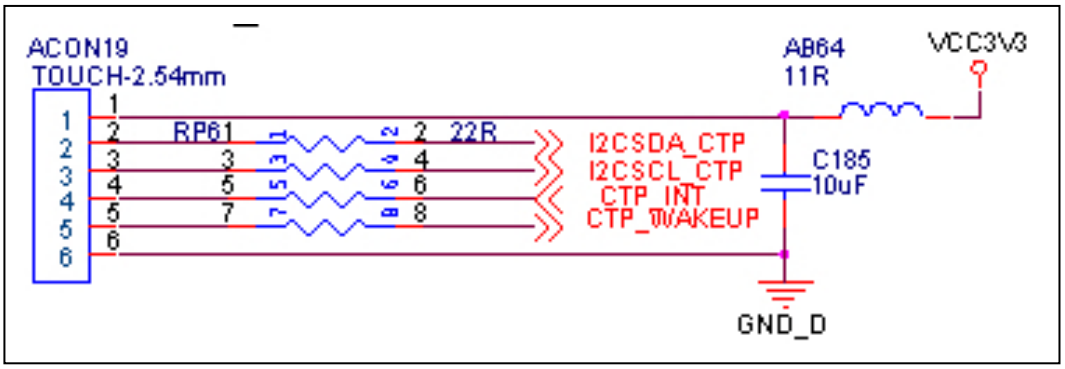

2. On 24-pin connector

a. 9-pin RGB:

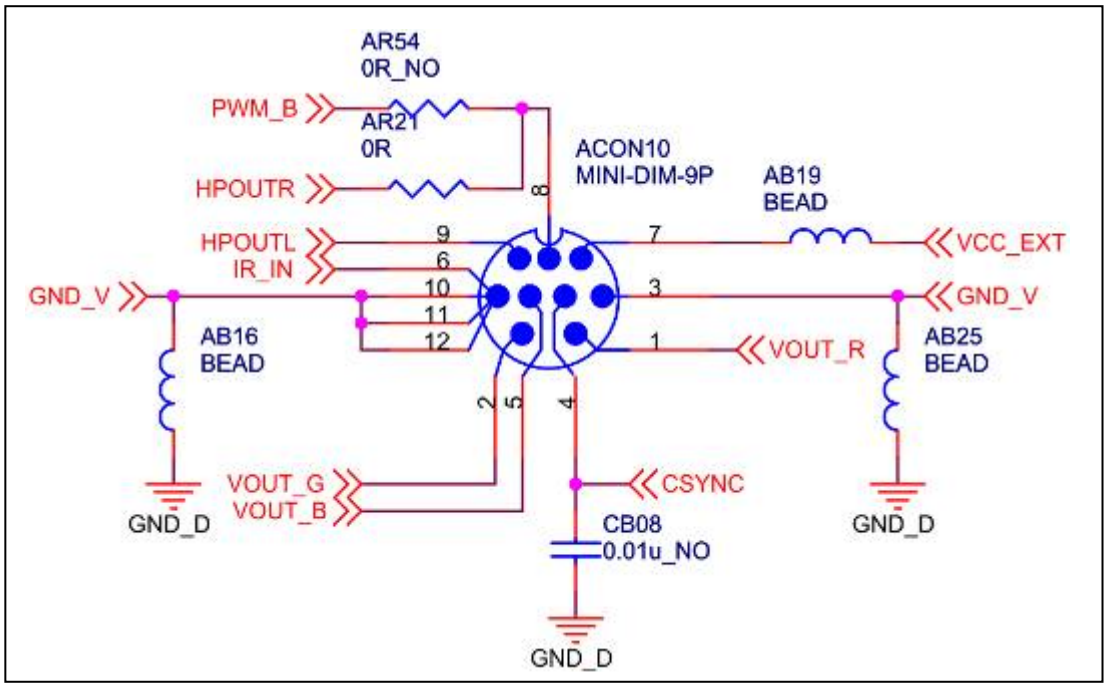

b. 8-pin Data:

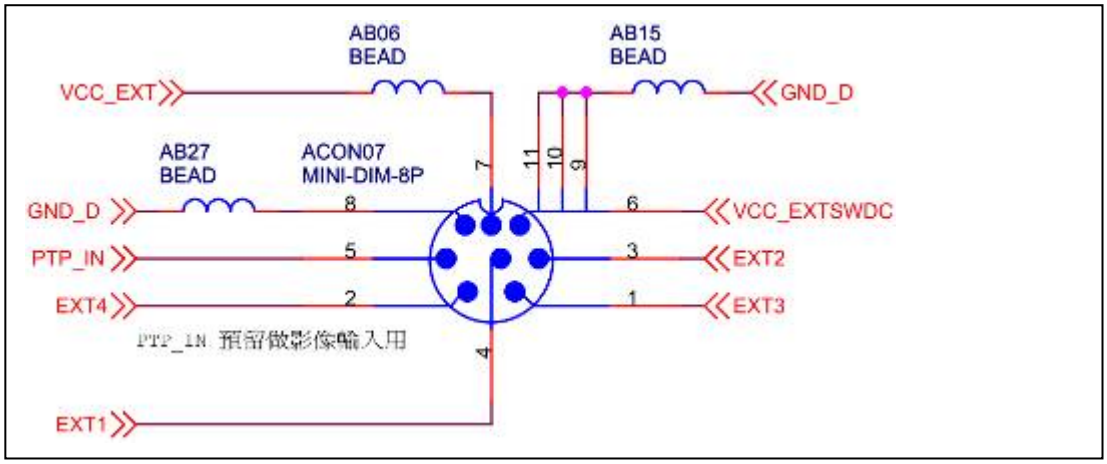

c. 6-pin Uart:

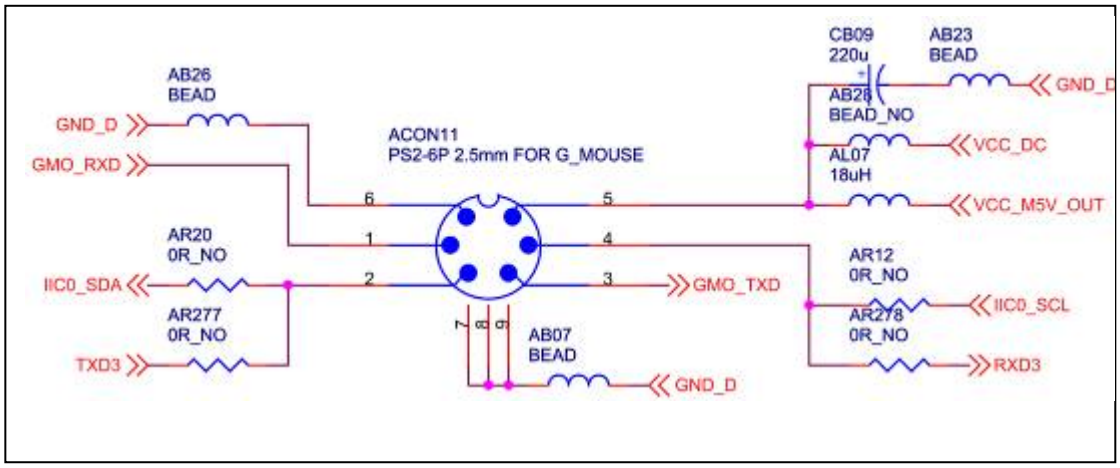

II. Settings

A. General settings

1. select correct resolution and touch panel

APK management → Settings → Display → Screen change

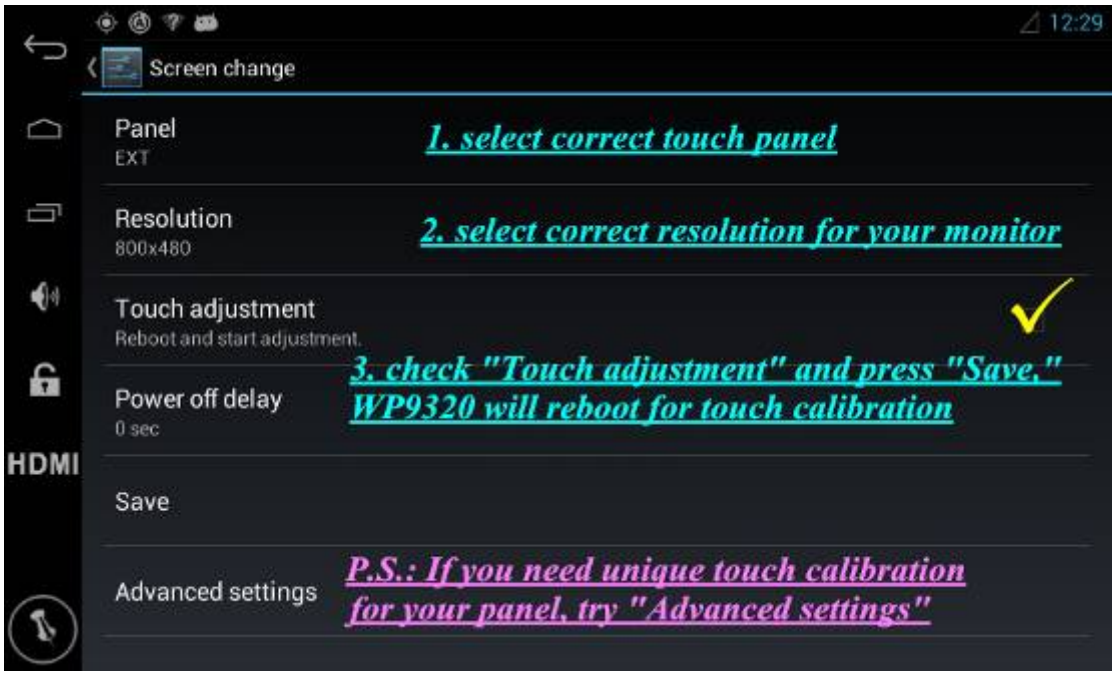

After pressing “Save,” select “OK,” and WP9320 reboots for touch calibration; you can also choose “Cancel,” you can calibrate touch later when next time WP320 reboots.

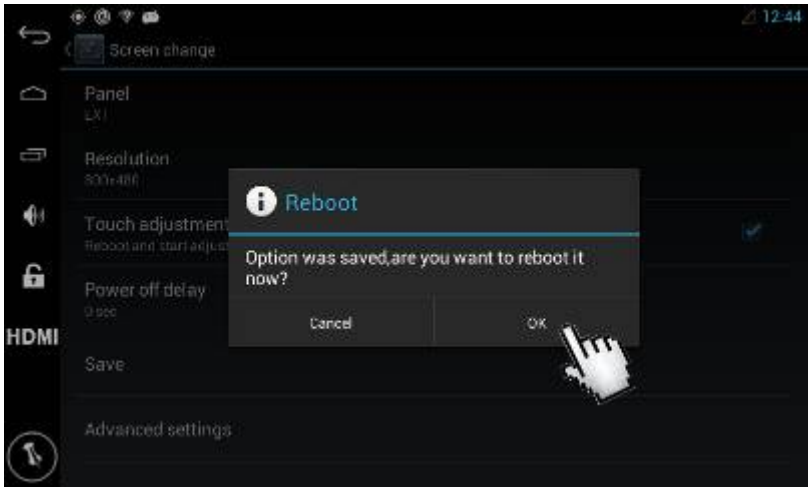

Press finger on “+” to calibrate touch

2. select HDMI resolution

If you are using HDMI output on WP9320, please press “HDMI” on navigation bar and select correct resolution.

3. Wifi connection

APK management → Settings → Wi-Fi

Scan and select the hot spot for connection, and Input wifi's password

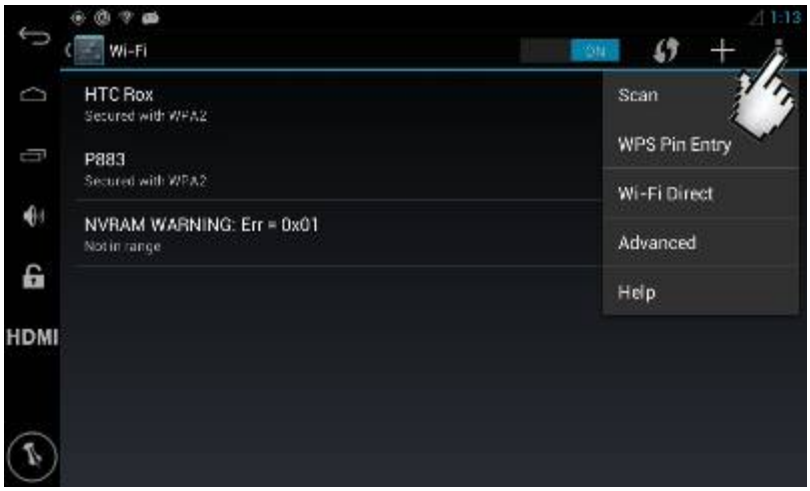

After input wifi's password, press "Done" and "Connect"

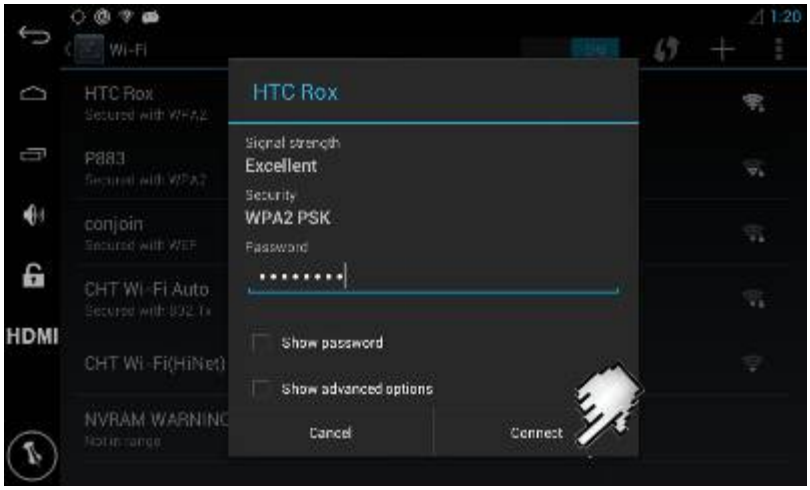

Connection succeeds when you see “Connected” and “” on top of the screen.

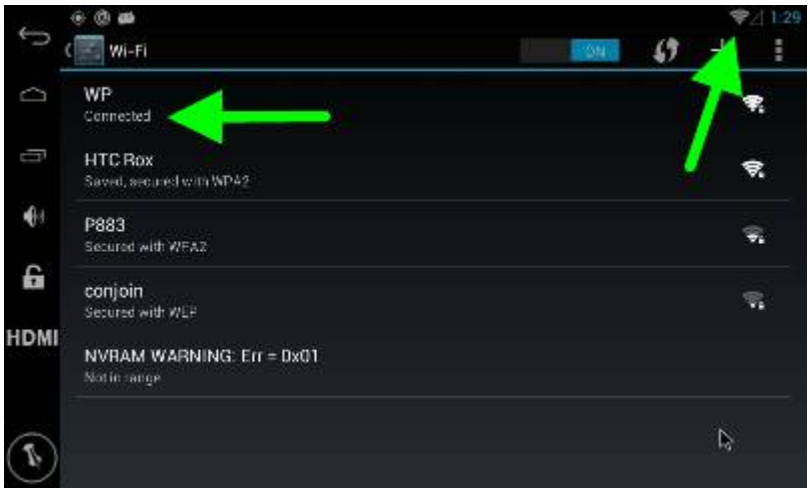

4. Password of screen lock

APK management → Settings → Security → Screen lock

You can set up your preferable password for screen lock:

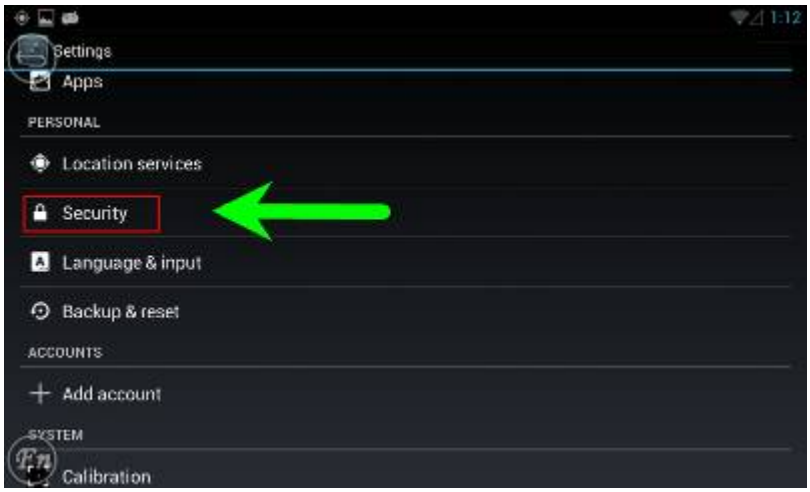

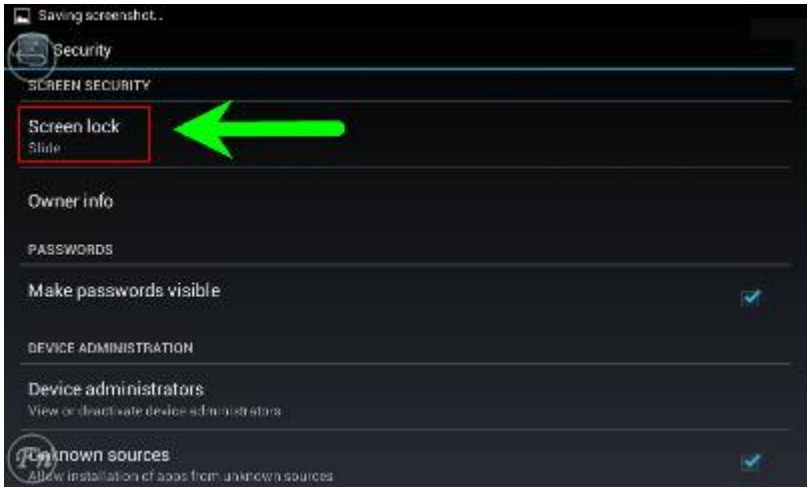

Choose your preferable screen lock and confirm:

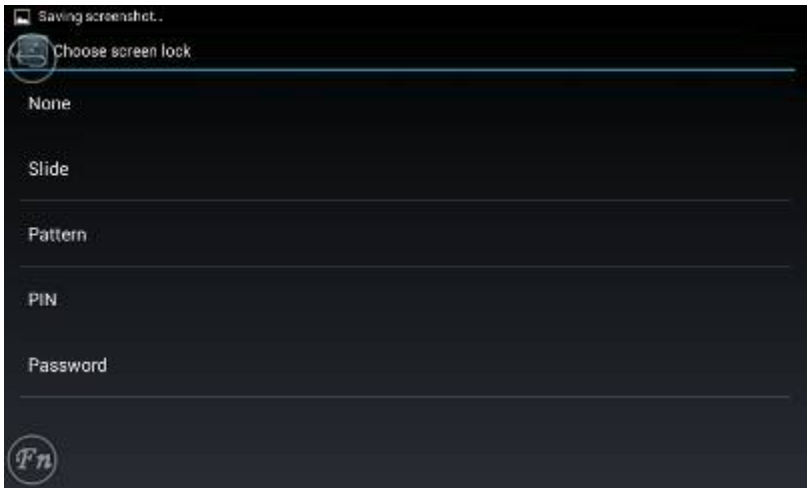

After screen lock is confirmed, you can lock the screen by pressing hot key “ ”.

5. Start-up picture change

Get “wp9920_update.zip” from your distributor for start-up picture change; unzip “wp9920_update.zip” on the computer, and you will see:

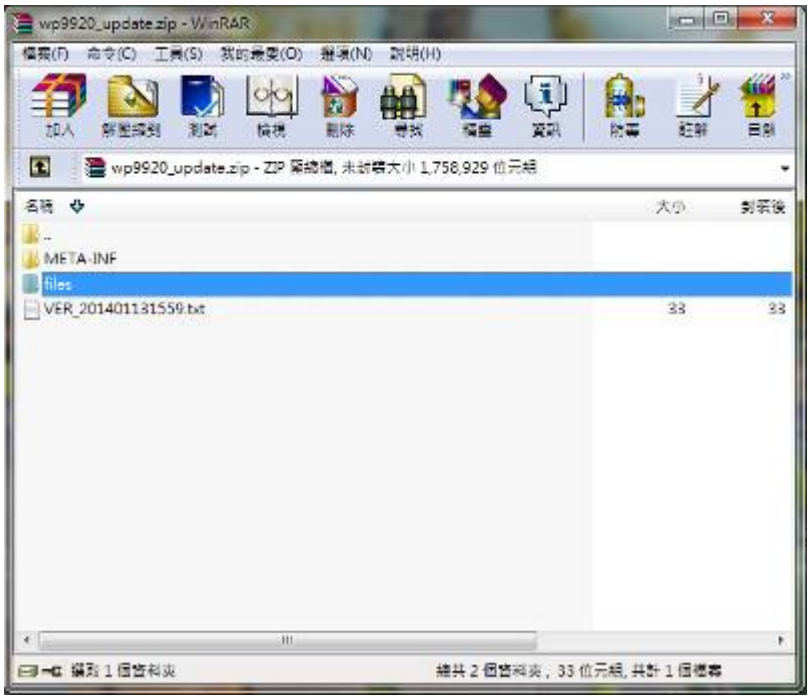

In folder “files,” you will find “logo.bmp,” change it with the start-up picture you want. Create your own “logo.bmp” with correct resolution for your screen, and make sure it’s 32 bit.

Zip folder “META-INF,” “files,” and “VER_201401131559.txt” and name it as “wp9920_update.zip,” and then please put wp9920_update.zip in SD card, input SD card in WP9320, restart WP9320. After update finishes, you will see your own start-up picture.

6. Boot-up animation change

Get “bootanimation.zip” from your distributor for boot-up animation change; unzip “bootanimation.zip” on the computer, and you will see:

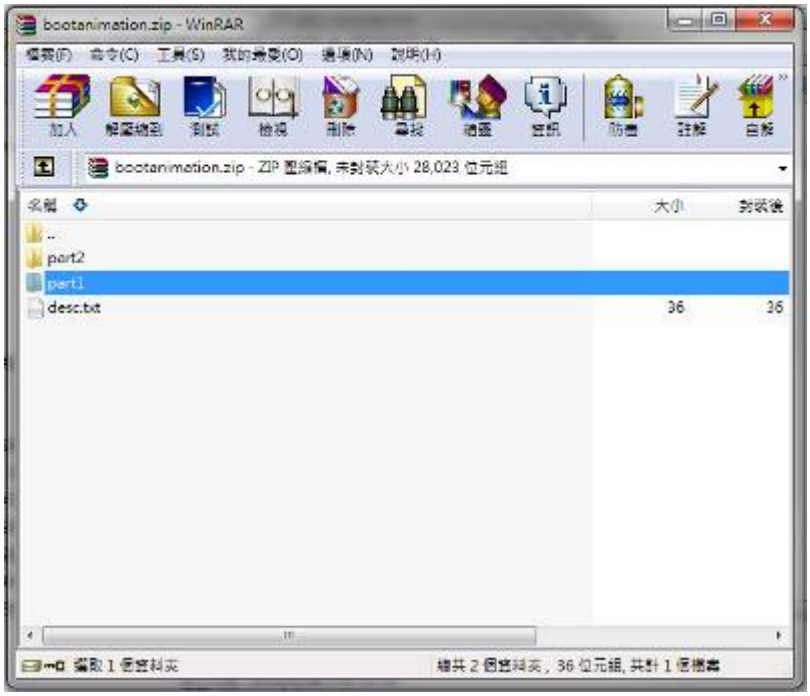

Create your own animation and replace “.png” files both in “part1” and “part2” folders. Make sure your “.png” files have correct resolution for your screen and use the same file names with those replaced.

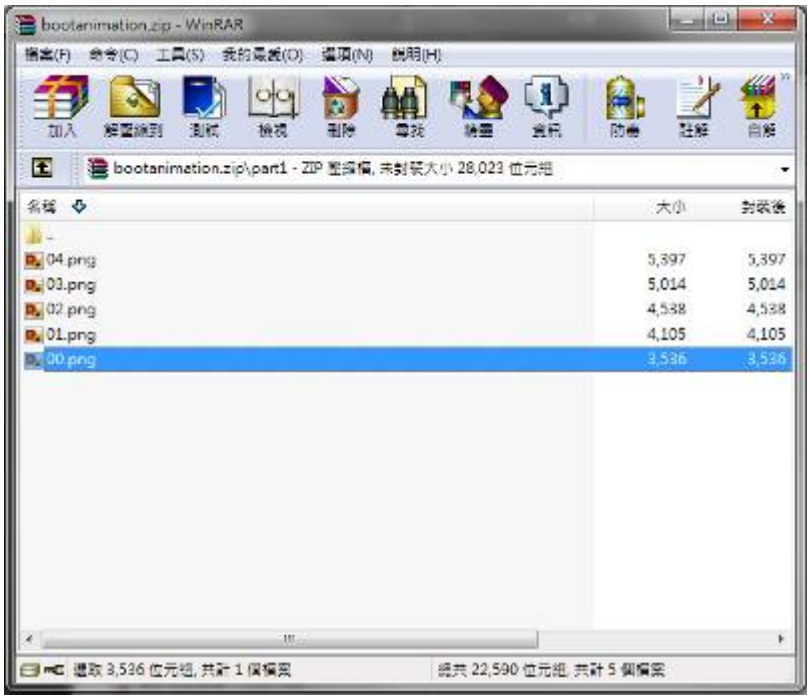

Zip folder “part1,” and “part2” and name it as “bootanimation.zip,” and then please put bootanimation.zip in SD card, input SD card in WP9320, restart WP9320. After update finishes, you will see your own animation.

B. Engineering settings

1. AutoRun & SD Card check

APK management → Settings → Customization → AUTORUN

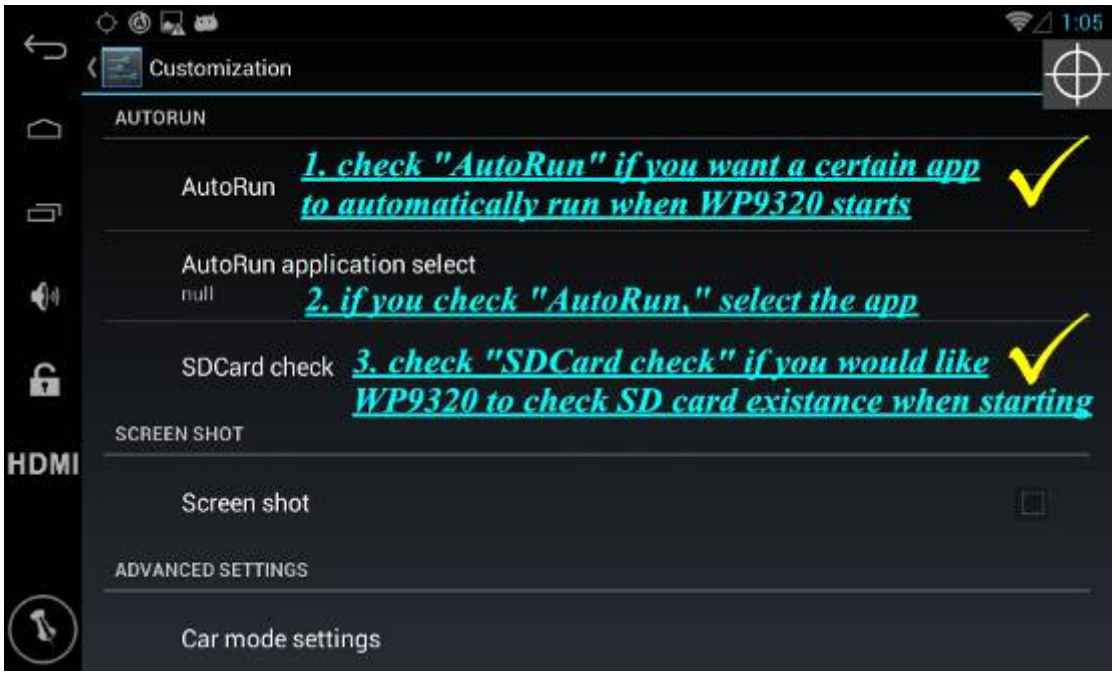

After settings of AutoRun, you can have WP9320 execute automatically the app you want every time when you turn on WP9320.

2. Screen shot

APK management → Settings → Customization → SCREEN SHOT

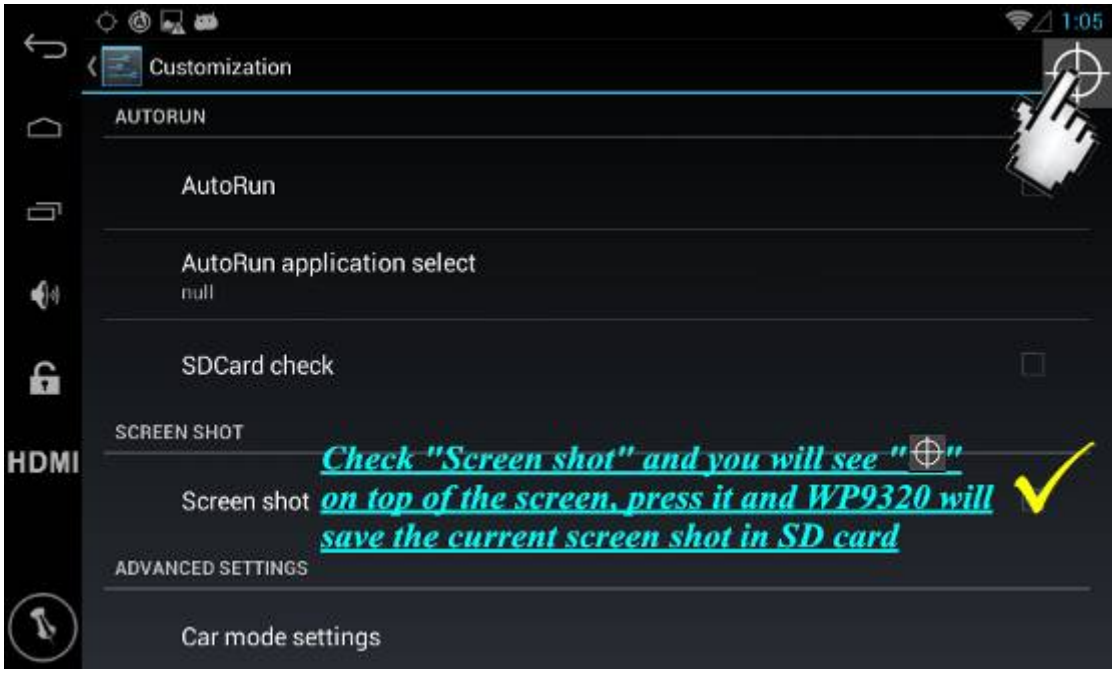

3. Car mode settings

APK management → Settings → Customization → ADVANCED SETTINGS

After open car mode with key code “7777”, you can select those apps which you want WP9320 to allow during car mode. Be sure to press “Save and reboot” in

“Default settings” after you finish car mode settings.

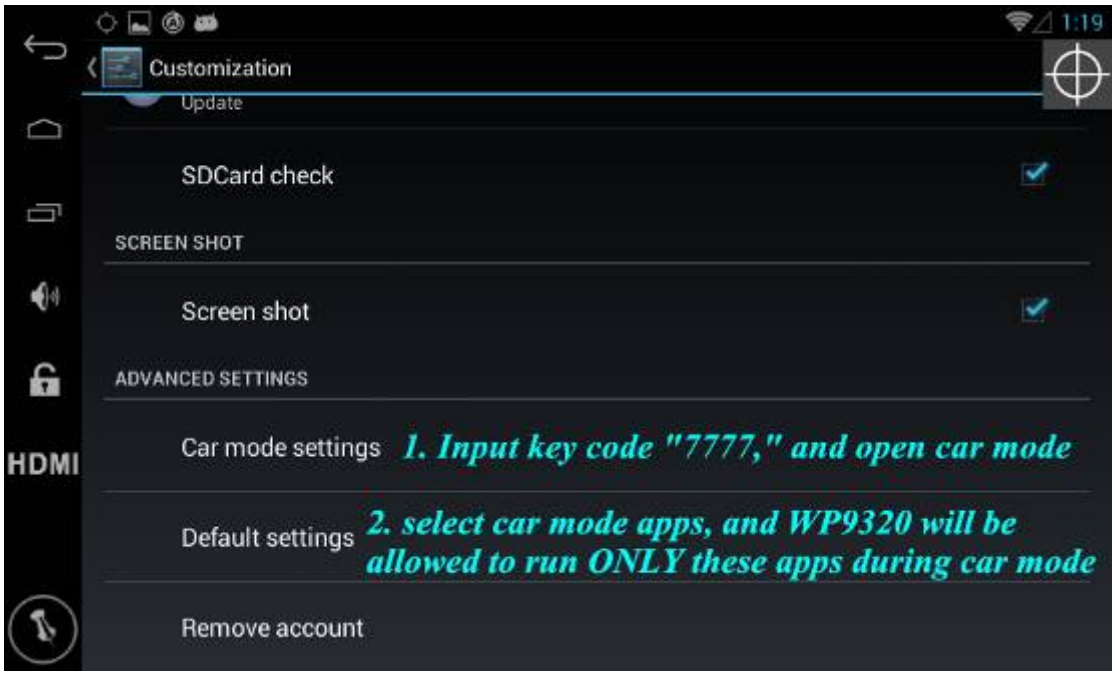

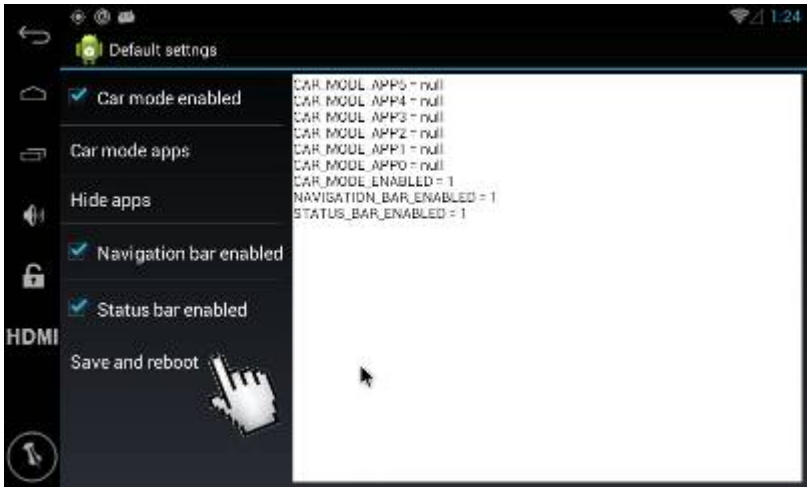

4. Hide apps

APK management → Settings → Customization → ADVANCED SETTINGS → Default settings → Hide apps

Enter default settings and input key code “7777,” and you can select those apps you want to hide. Press “Save and reboot” in “Default settings” after you finish.

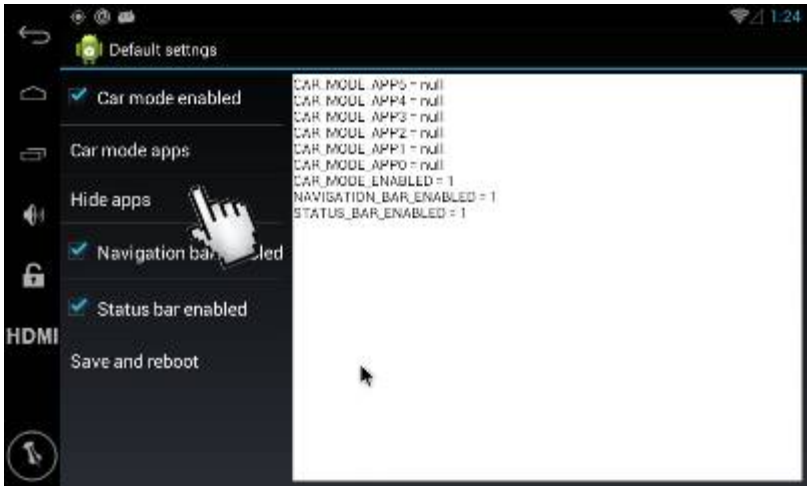

5. Navigation bar

APK management → Settings → Customization → Navigation bar → Auto mode

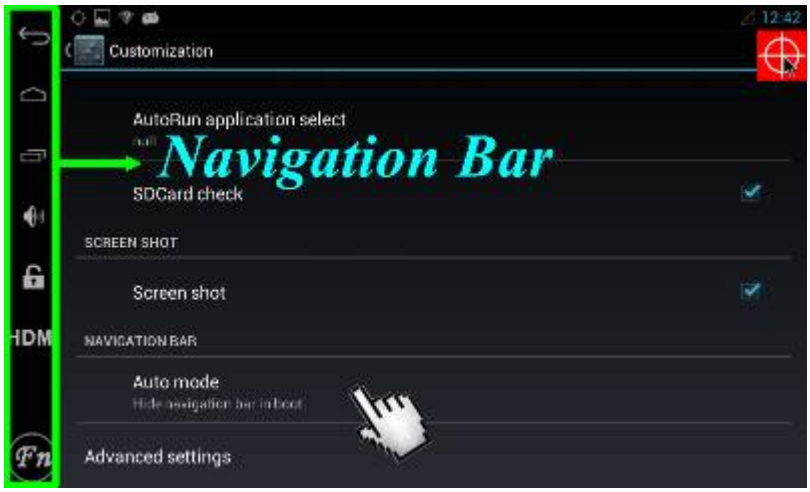

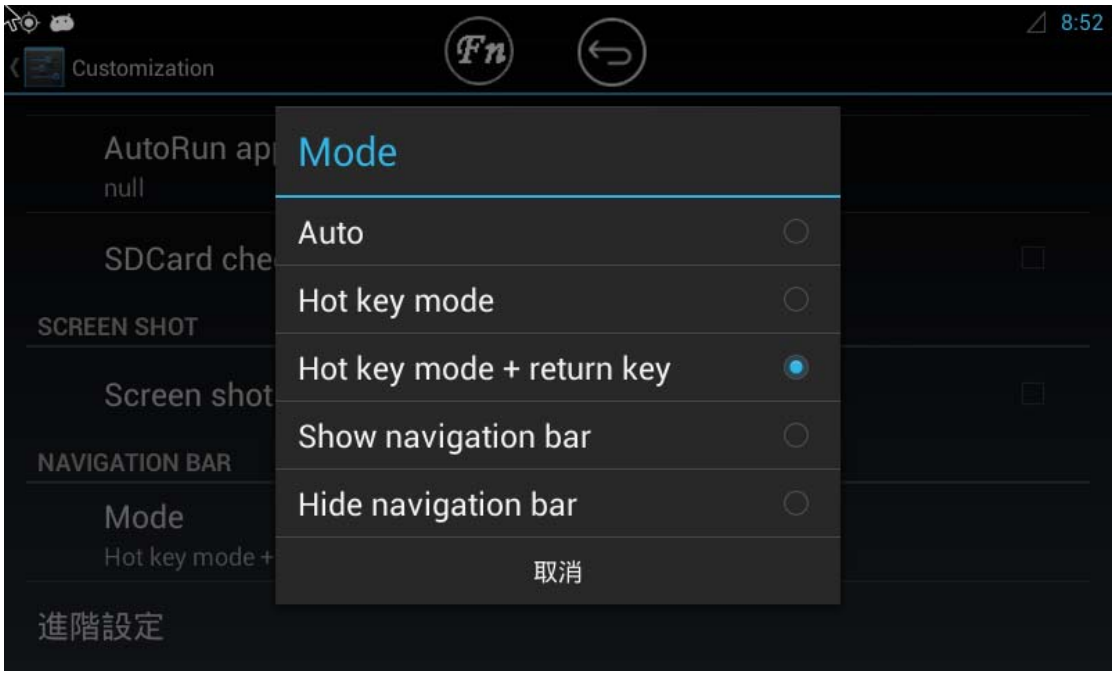

a. Auto: navigation bar hides; touch screen to activate navigation bar

b. Hot key mode: press to activate navigation bar

c. Hot key mode + return key: press to activate navigation bar, return key remains when navigation bar hides

d. Show navigation bar in boot: navigation bar always shows.

e. Hide navigation bar in boot: navigation bar always hides.

P.S.: and can be shifted with long press.

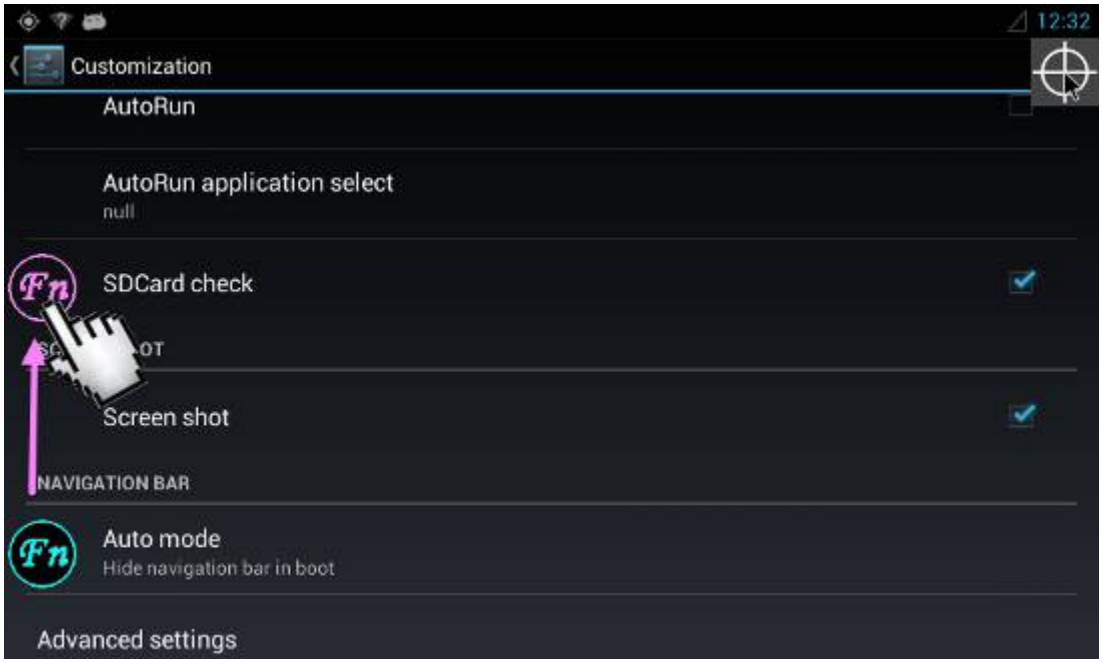

6. Remove account

APK management → Settings → Customization → ADVANCED SETTINGS → Remove account

Press “Remove account” to remove Android account on WP9320.

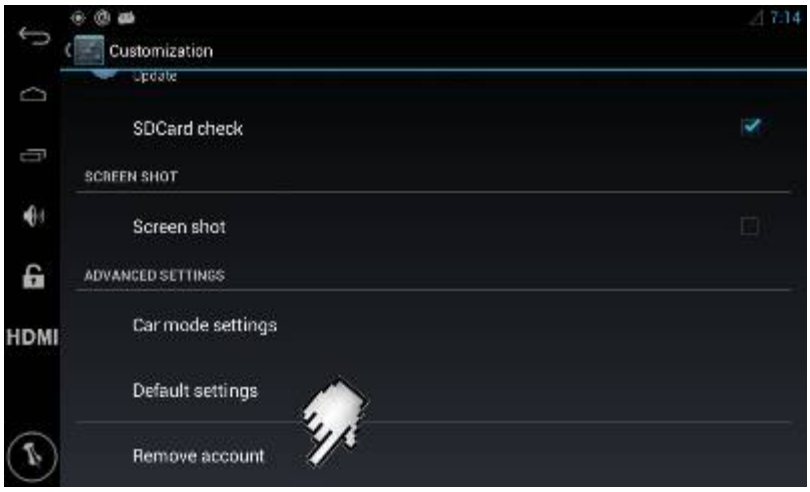

7. Launcher default

APK management → Apps → ALL → Launcher 4 or Home Launcher → Always → Clear defaults → select your preferable launcher design

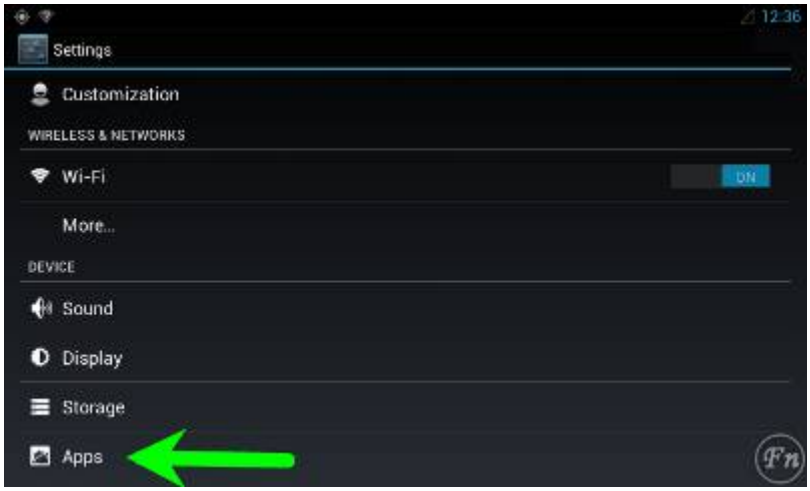

Slide from right to left until you see “ALL”

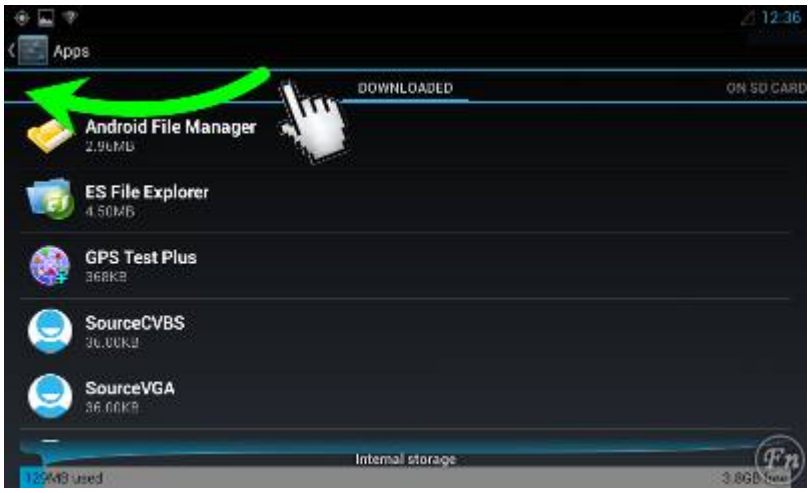

Find the launcher you’re using currently

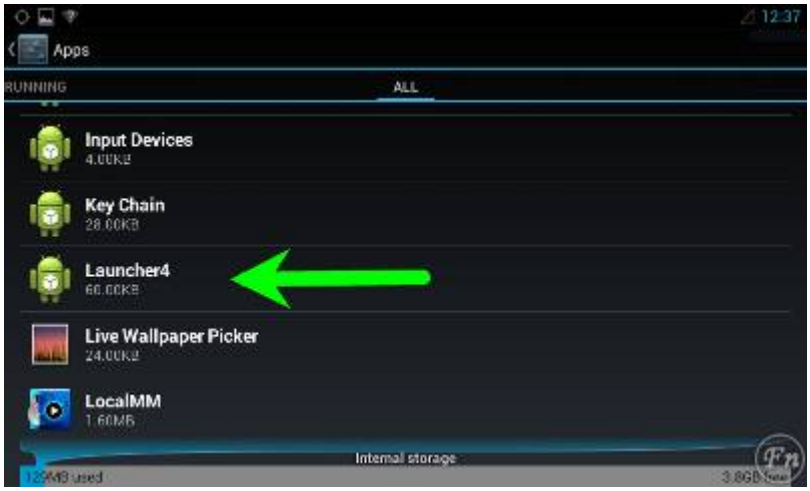

Press “Clear defaults,” and you will be able to select your own preferable launcher.

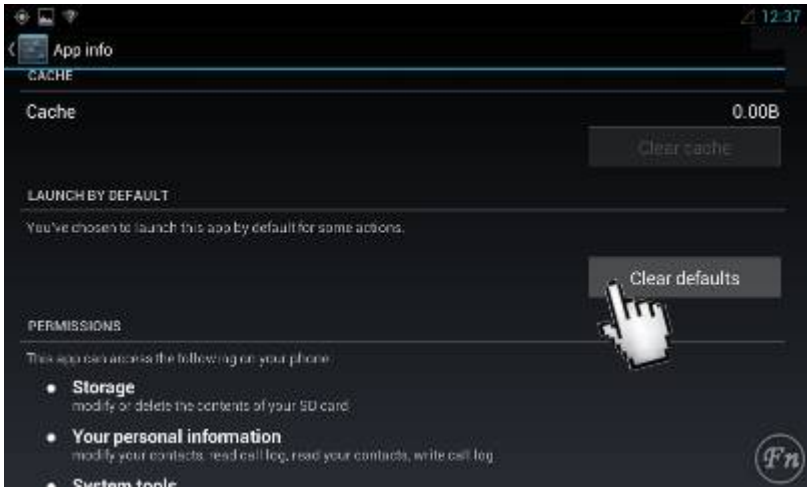

III. RF remote control

After you put batteries into RF remote control , you can start operating WP9320 with RF remote control. P.S.: Not all keys on RF remote work with your software, because it depends on whether the key code was installed in the software.

Key code of RF remote control:

Route 27 VK_Home		Setup 87 VK_F3		Power 23 VK_F9
ESC 26 VK_ESCAPE		Up 90 VK_UP		V+/PU 25 VK_F5
G 04 VK_F7	Left 14 VK_LEFT	Enter 13 VK_return	Right 18 VK_right	V-/PD 07 VK_F6
Return 05 VK_F8		Down 29 VK_DOWN		Home 28 VK_F12
	Zoom+		Zoom-	

IV. Software update

1. OS version check

APK management → Settings → About phone

2. OS update

Put “wp9920_update.rar” file into root of 2G SD card, which had better be SanDisc, insert SD card into WP9320, restart WP9320, and update starts automatically.